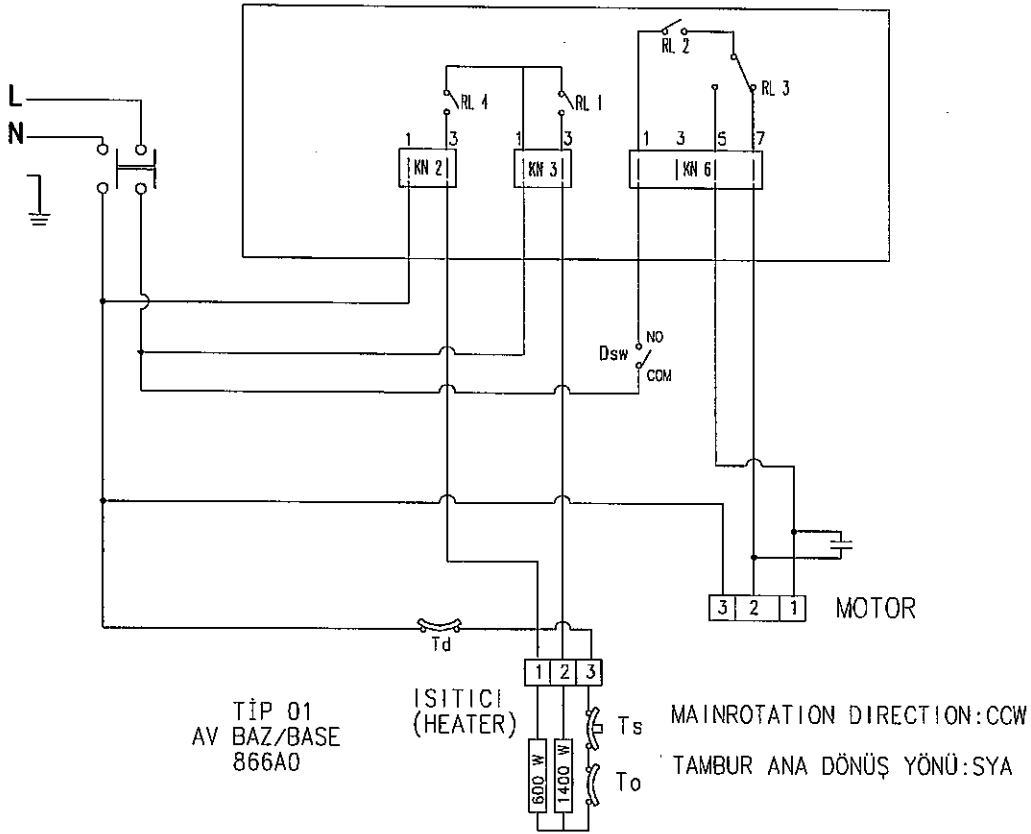
L
N
RL 4
RL 1
RL 2
RL 3
KN 2
KN 3
KN 6
Dsw
NO
COM
MOTOR
Td
ISITICI
(HEATER)
600 W
1400 W
Ts
To
TİP 01
AV BAZ/BASE
866A0
MAINROTATION DIRECTION:CCW
TAMBUR ANA DÖNÜŞ YÖNÜ:SYA

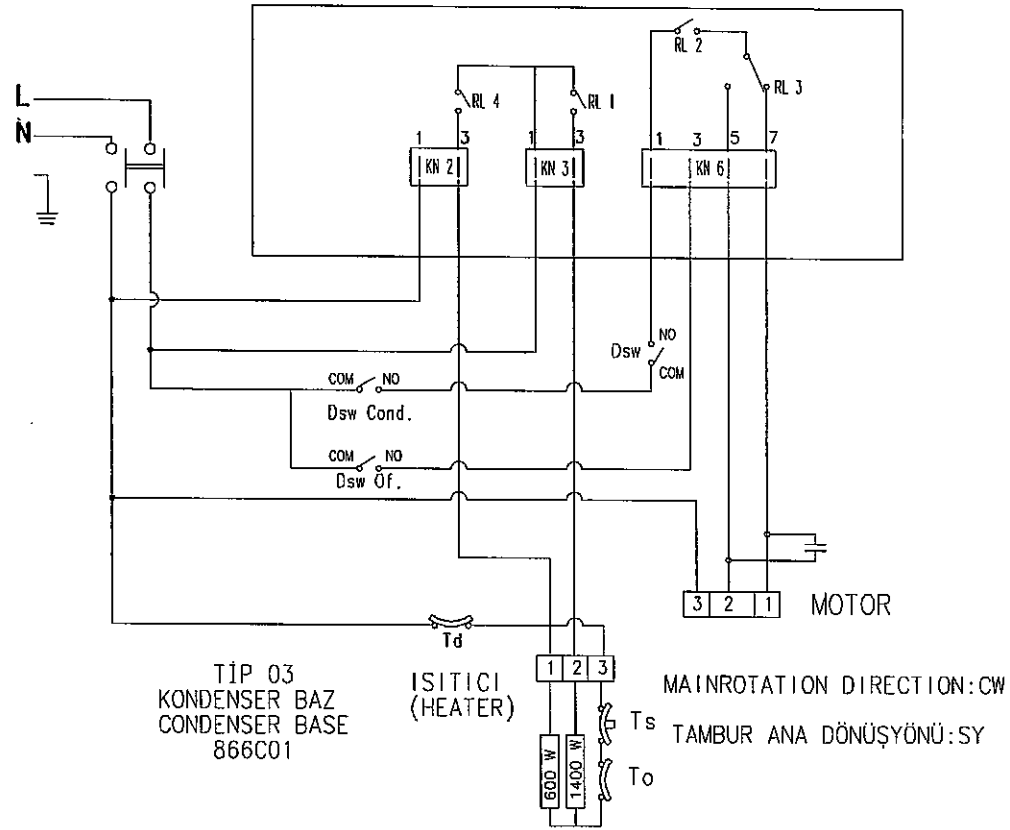
L
N
RL 4
RL 1
RL 2
RL 3
KN 2
KN 3
KN 6
Dsw
NO
COM
Dsw Cond.
Dsw Of.
MOTOR
Td
TİP 03
KONDENSER BAZ
CONDENSER BASE
866C01
ISITICI
(HEATER)
600 W
1400 W
Ts
To
MAINROTATION DIRECTION:CW
TAMBUR ANA DÖNÜŞYÖNÜ:SY